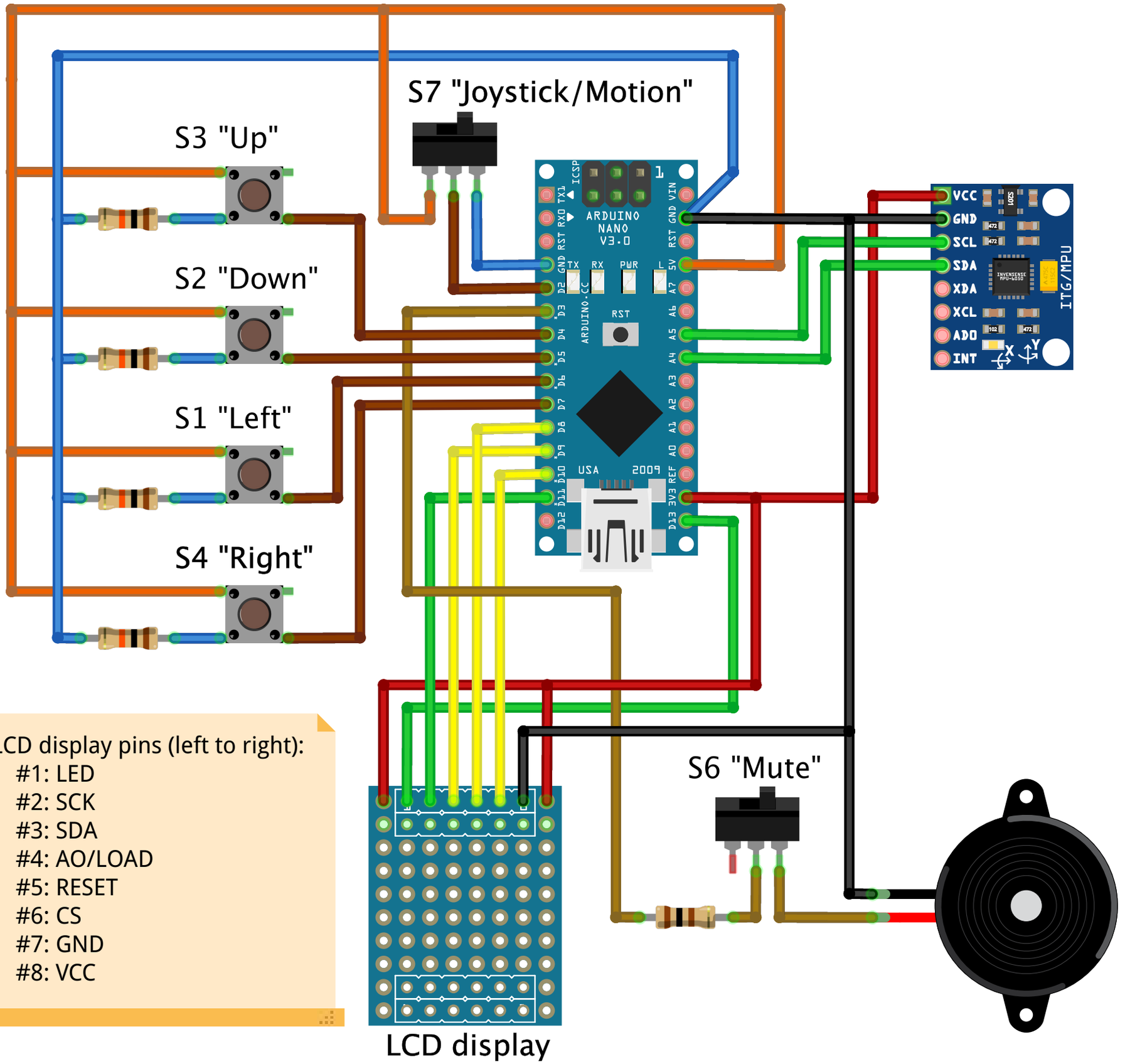
S7 "Joystick/Motion"
S3 "Up"
S2 "Down"
S1 "Left"
S4 "Right"
S6 "Mute"
ARDUINO NANO V3.0
ITG/MPU
VCC
GND
SCL
SDA
XDA
XCL
ADO
INT
LCD display
LCD display pins (left to right):
#1: LED
#2: SCK
#3: SDA
#4: AO/LOAD
#5: RESET
#6: CS
#7: GND
#8: VCC

fritzing